UBX 10W Series

USB AC/DC Adaptor
USB-A

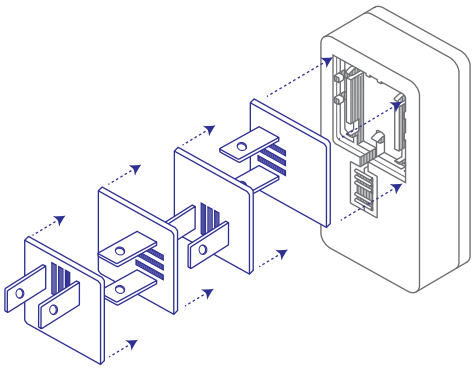

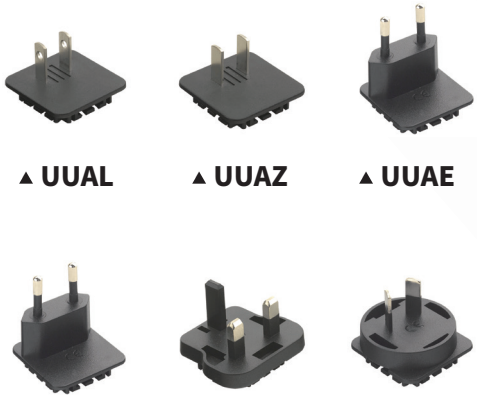

▲ UUAL ▲ UUAZ ▲ UUAE

▲ UUAR ▲ UUAK ▲ UUAA

▲ UBX310

Please contact our sales department for safety standard of each model.

Safety Certificate | Reliability Guarantee | Energy Saving | ROHS 2 | LPS | EMC | Interchange-able Pin | Charging

Product Highlights

- Stability
- Ultra Small Size
- Light Weight
- Energy Efficiency
- Suit MP3 Player, Mobile Phone, Portable GPS Device, PDA

Protection

- Short Circuit Protection
- Over Voltage Protection
- Over Current Protection

Safety Standard

- 60950-1
- 62368-1
- GB4943.1
- PSE 別表第八

Efficiency

- Energy Efficiency Level VI(ErP/DoE)
- Meet COMMISSION REGULATION(EU) 2019/1782
- Meet DOE 10 CFR part 429 and 430

Emissions

- FCC Part15 Class B
- CE CISPR 32 EN55032
- VCCI Class B
- GB9254/GB17625.1
- BS EN 55032

Immunity

- EN 55035
- BS EN 55035

Electrical Spec

Input					
Description	Min.	Typ.	Max.	Units	Comment
Voltage	90	100~240	264	Vac	
Frequency	47	50/60	63	Hz	

Environmental					
Description	Min.	Typ.	Max.	Units	Comment
Operating Temperature	0	-	40	°C	Free Convection,Sea Level
Storage Temperture	-20	-	65	°C	Free Convection,Sea Level
Operating Humidity	5	-	95	%RH	No Condensing
Storage Humidity	5	-	95	%RH	No Condensing

Typical model list

Output Condition	DC Output Voltage	DC Output Current	Output Voltage Precision	Ripple	Noise	Average Active Efficiency	No-Load Power Consumption	Option/Remark
USB-A	5.0V	2.0A	±5%	200mV	300mV	78.70%	0.1W	
	5.0V	2.1A	±5%	200mV	300mV	79.04%	0.1W	
	5.35V	2.0A	±5%	200mV	300mV	79.49%	0.075W	

■ Measurement Condition
1. Mesurements shall be made with an oscilloscope with 20MHz bandwidth.
2. Outputs shall be bypassed at the connector with a 0.1uF ceramic disk capacitor and a 10uF electrolytic capacitor to simulate system loading.

Mechanical Spec

UUAL Series	UUAZ Series
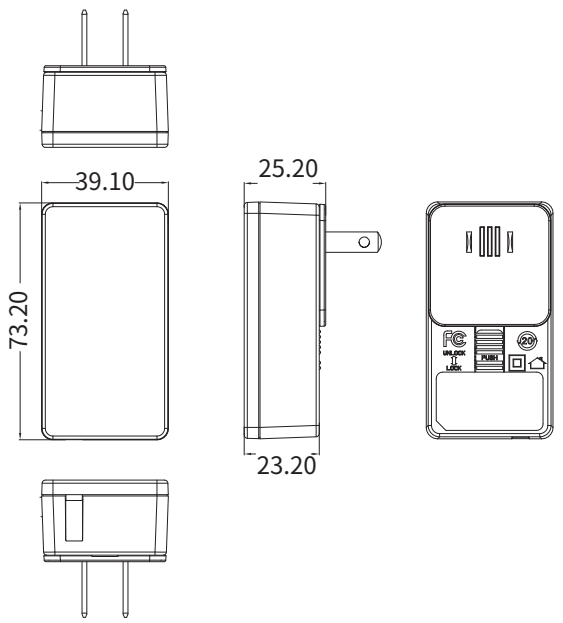	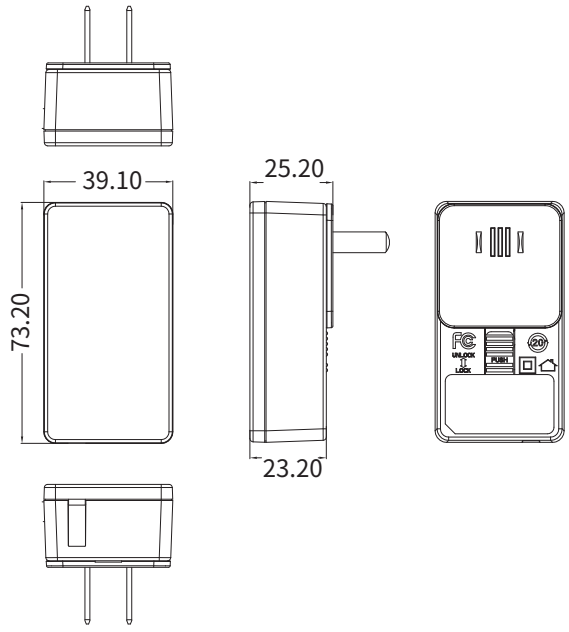

Mechanical Spec

UUAE Series

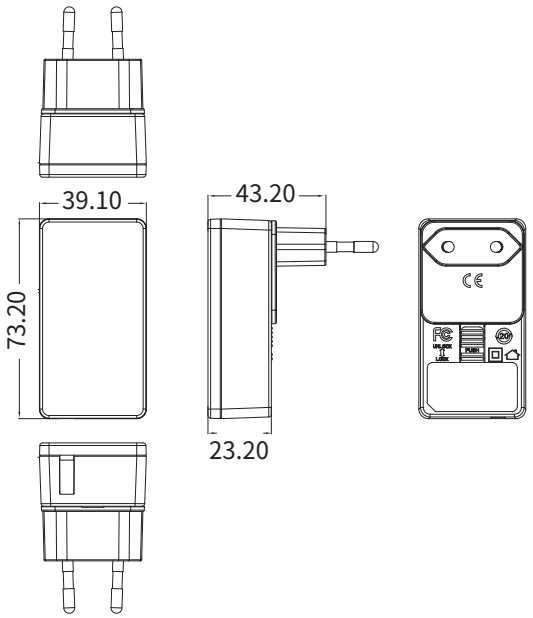

UUAR Series

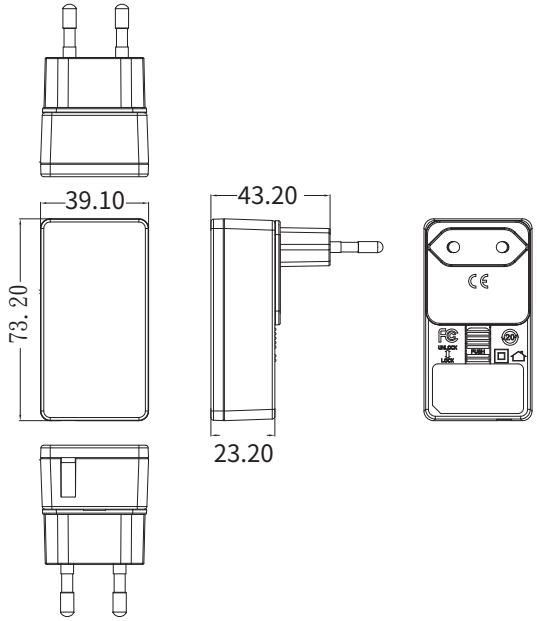

UUAK Series

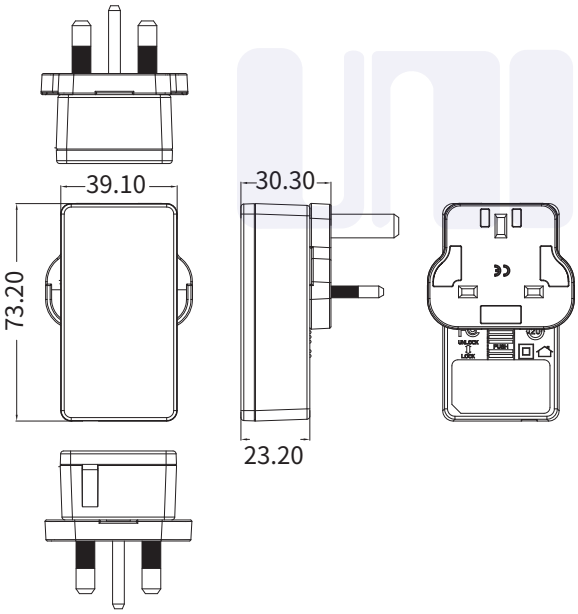

UUAA Series

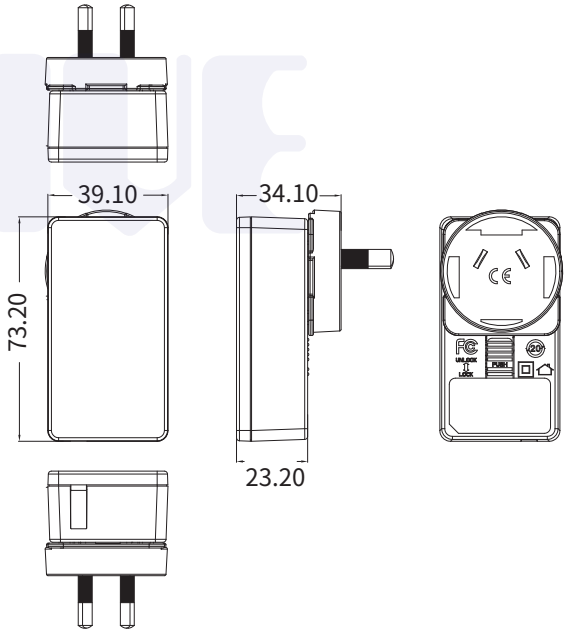

the following blank

Please contact our sales department for details of each model